Connected Automated Driving

Overview, design, and technical challenges

Gaurav Bansal
Toyota InfoTechnology Center, USA

March 28, 2018

Automated Driving

TOYOTA
InfoTechnology
Center, U.S.A., Inc.
PROTECTED

HIGHWAY AUTOMATED DRIVING

URBAN AUTOMATED DRIVING

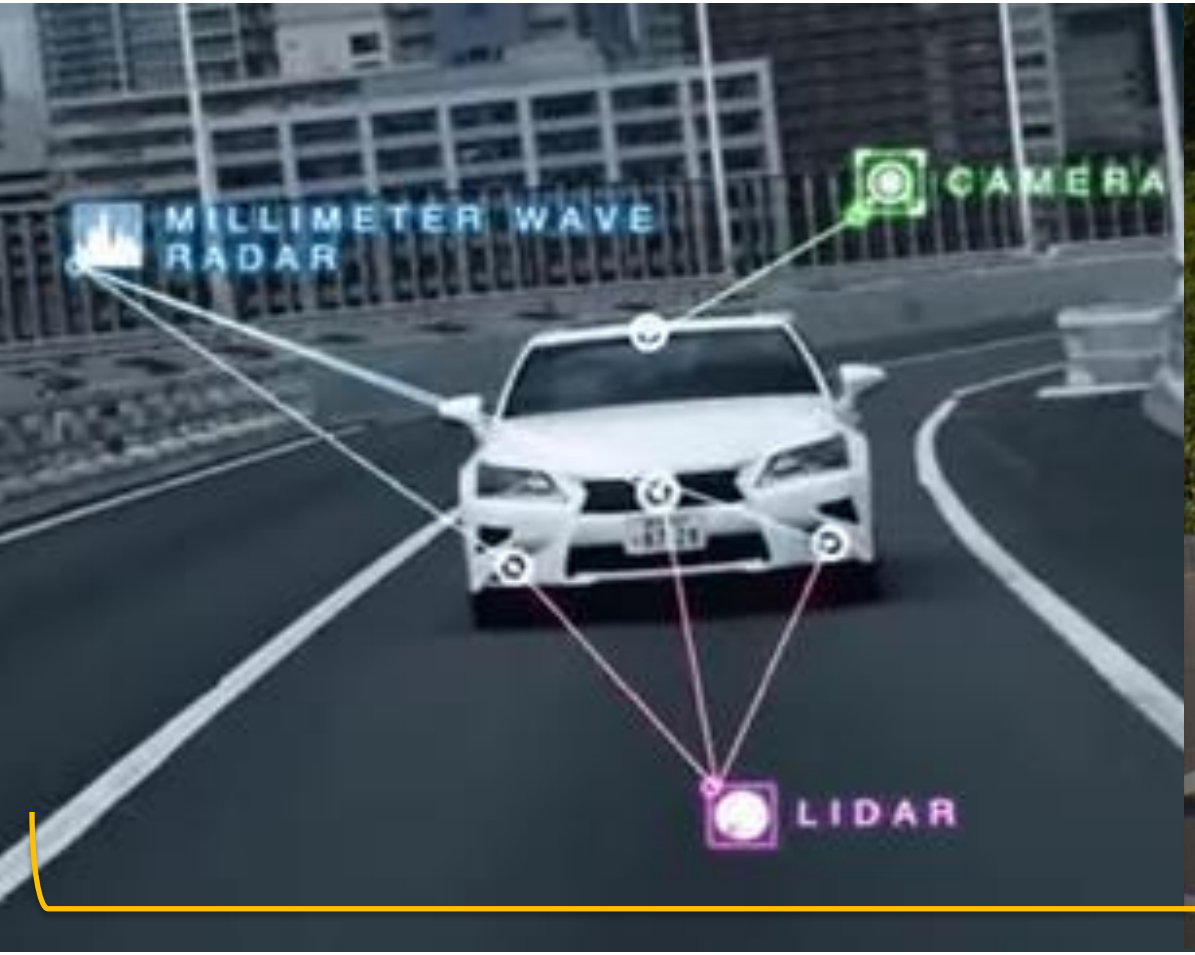

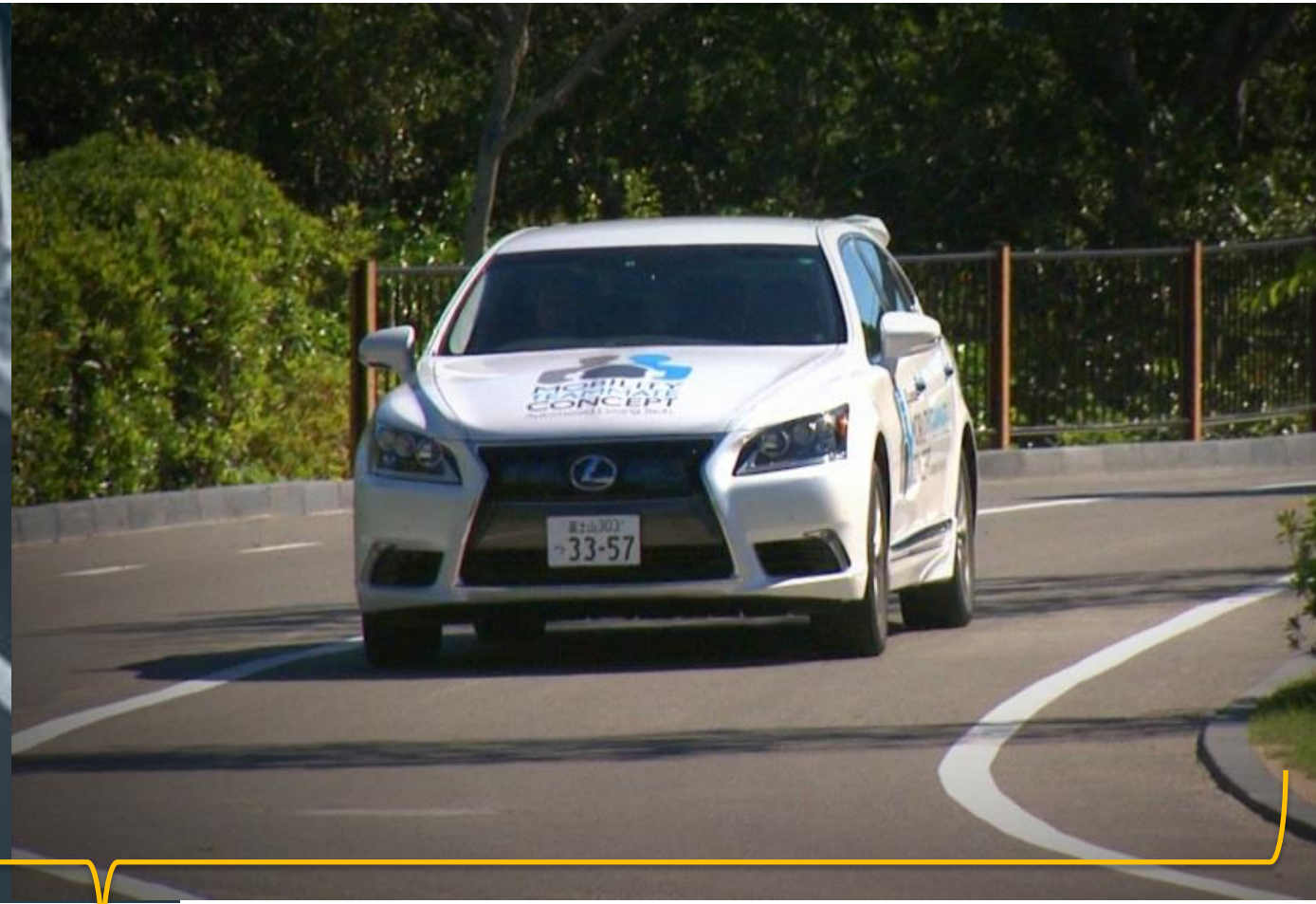

Sensors are at the heart of Automated Driving Technology

Challenges in Automated Driving Design

TOYOTA InfoTechnology Center, U.S.A., Inc.

PROTECTED

	ACCURACY/ RANGE	WEATHER	COST	URBAN/ NLOS SCENARIO	MAIN CHALLENGES
MAPPING	Δ	O	Δ	O	Might not exist for all US roadways. Errors will exist.
LOCALIZATION	X	O	O	X	GPS (including future GPS3) has challenges in lane level localization for urban canyon.
	O	X	Δ	O	LiDar based localization can be costly and does not work well in bad weather.
PERCEPTION	Δ	X	O	X	Limited range (around 50-80 m). Major challenges in NLOS and bad weather
PATH PLANNING	Δ	X	O	Δ	Challenges in Merging, NLOS Urban driving, Platooning

LEGEND	O – good performance	Δ - room for improvement	X - challenges

What if we add Connected Intelligence to Automated Vehicles?

TOYOTA InfoTechnology Center, U.S.A., Inc.

PROTECTED

	ACCURACY/ RANGE	WEATHER	COST	URBAN/ NLOS SCENARIO	SOLVING CURRENT CHALLENGES
MAPPING	O - good performance				Data from lead vehicles can be used for real-time map updates and correction of errors.
LOCALIZATION					Highly improved localization by leveraging GPS, LiDar of the neighboring connected vehicles.
PERCEPTION					Non-line of sight view, with robustness for any weather scenario. Ranges up to 300-500 meters.
PATH PLANNING					Ultra-low latency Communication with vehicles while merging, platooning, intersection crossing

Connected Intelligence will help provide long range sensing, NLOS operations in a cost-effective manner with robustness for any weather condition

What has been done so far on Connected Vehicles?

TOYOTA InfoTechnology Center, U.S.A., Inc.

PROTECTED

DSRC: Dedicated Short-Range Communication

Ad hoc networking technology that allows vehicles to communicate with each other, roadside devices, pedestrians, bicycles, trains, …

CURRENT STATUS:

- Moving toward deployment
- Many stakeholders in US, China, Japan, Europe and elsewhere

Basic Safety Message being transmitted on *Safety Channel* using DSRC

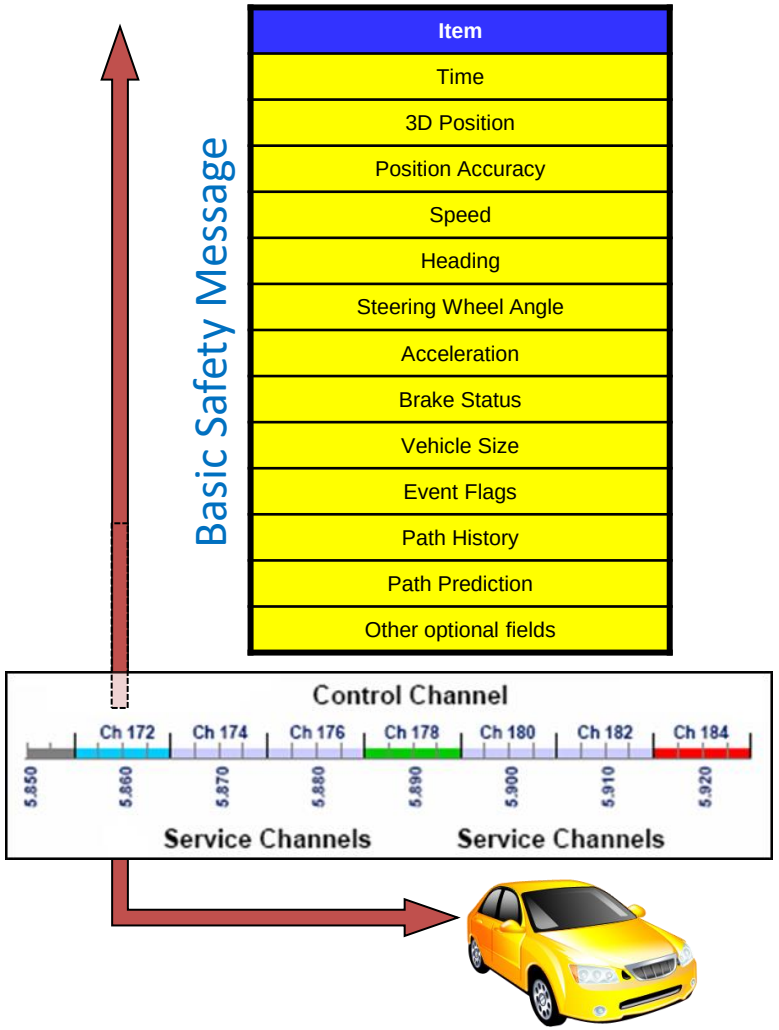

System design

TOYOTA InfoTechnology Center, U.S.A., Inc.

PROTECTED

Cooperative Automated Driving with **highly improved mapping & localization, perception, and path planning**

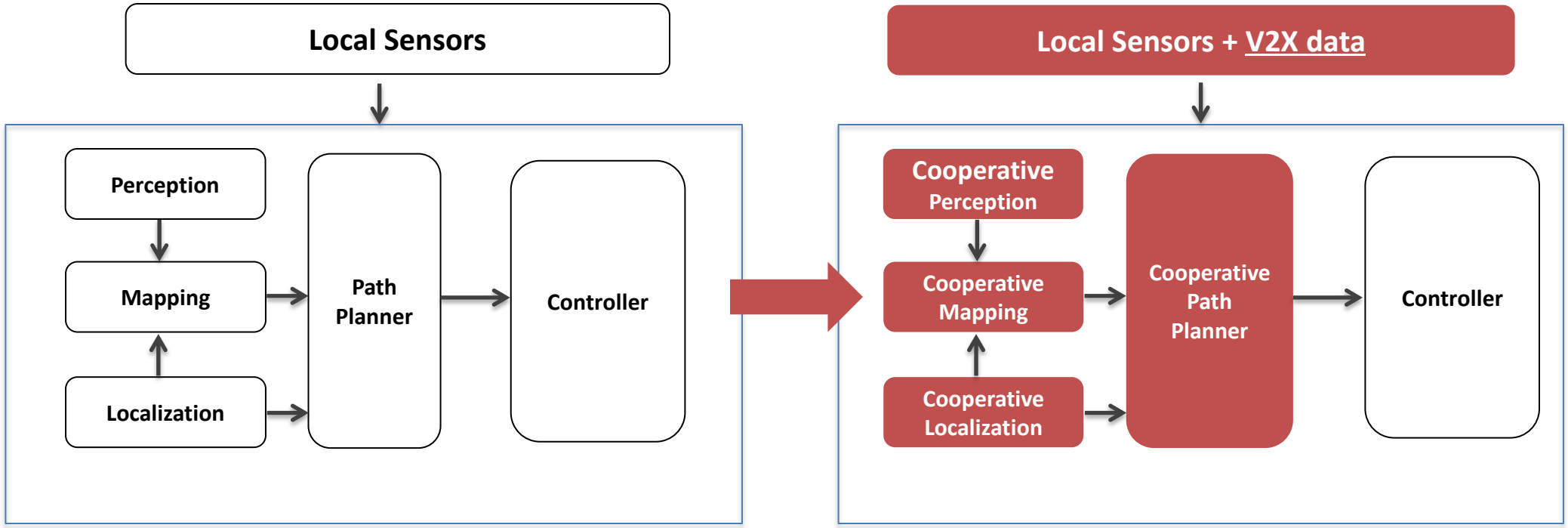

Cooperative Mapping Overview

TOYOTA InfoTechnology Center, U.S.A., Inc.
PROTECTED

Main Idea behind Cooperative Mapping:

Building real-time Automated Driving maps using the long-range of V2X

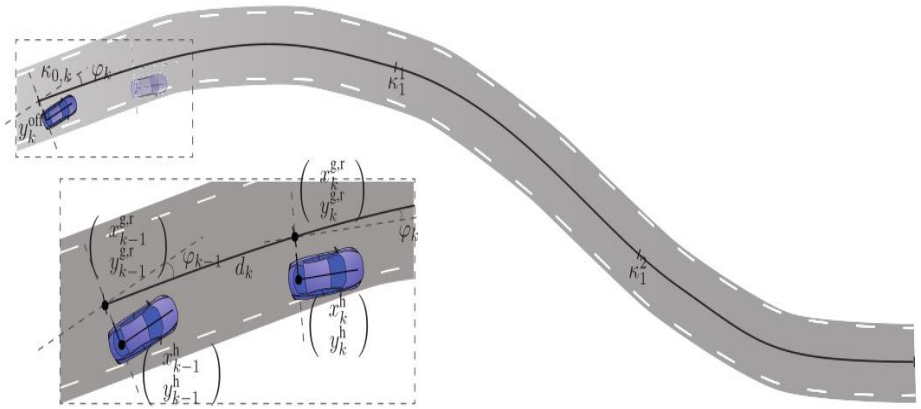

Significant improvement in road estimation as compared to using only local sensor data (Radar + Camera)

Measuring error in estimating road geometry using Camera, V2X and GPS

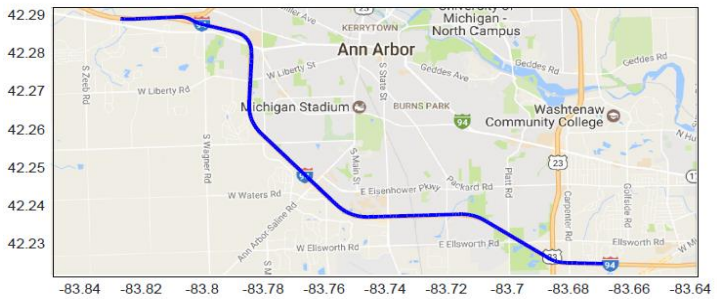

Data collected in Ann Arbor

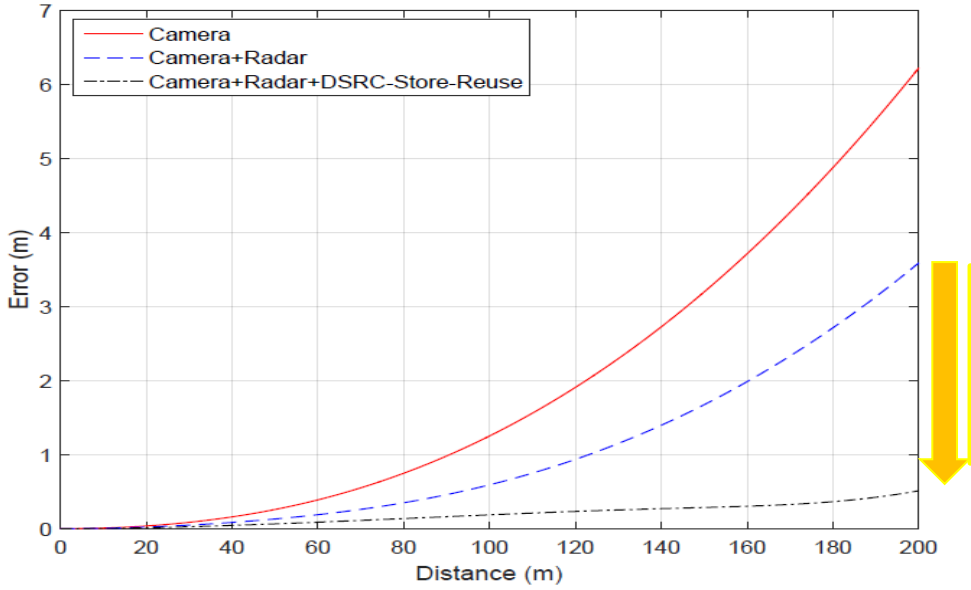

Lane-level accuracy in road estimation at 200m

TOYOTA InfoTechnology Center, U.S.A., Inc.
PROTECTED

Detecting state of the Remote Vehicle (keeping its lane or changing lanes) is crucial for Cooperative Mapping

When the vehicle is not changing lanes, its trajectory is a good indicator of lane geometry. In this scenario, V2V data from the remote vehicle can be used to augment accuracy of lane geometry estimation.

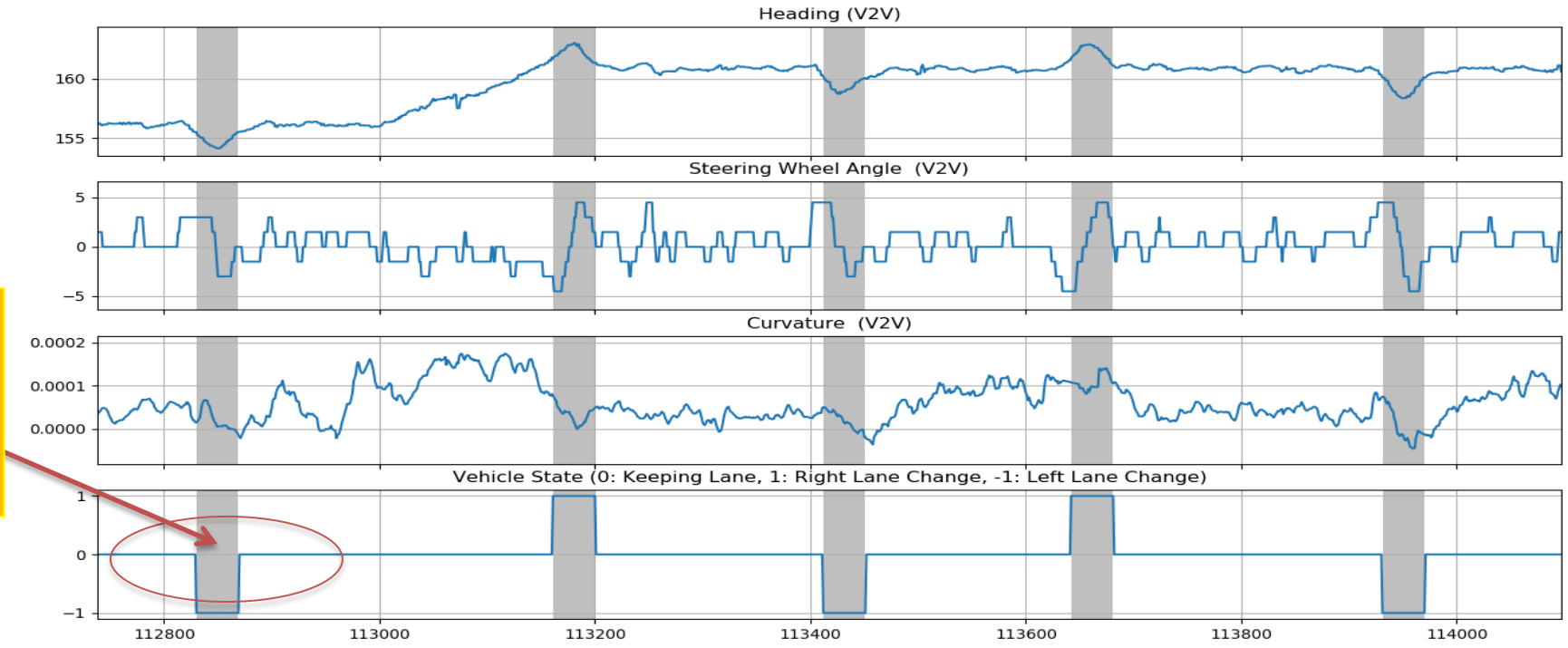

High detection accuracy achieved using Machine Learning Classifiers

TOYOTA INFOTECHNOLOGY CENTER, U.S.A., INC.
PROTECTED

Main Idea behind Cooperative Localization:

Improving positioning by leveraging GPS receivers of neighboring vehicles

Flow of data between host vehicle and neighbors

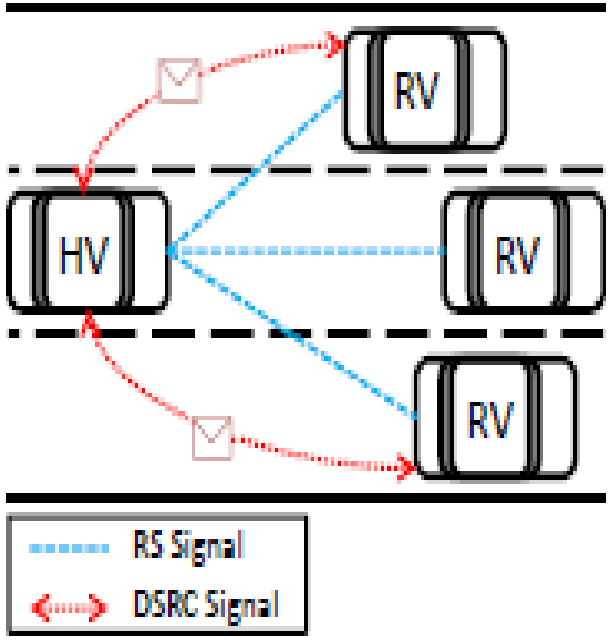

Sensor Fusion block

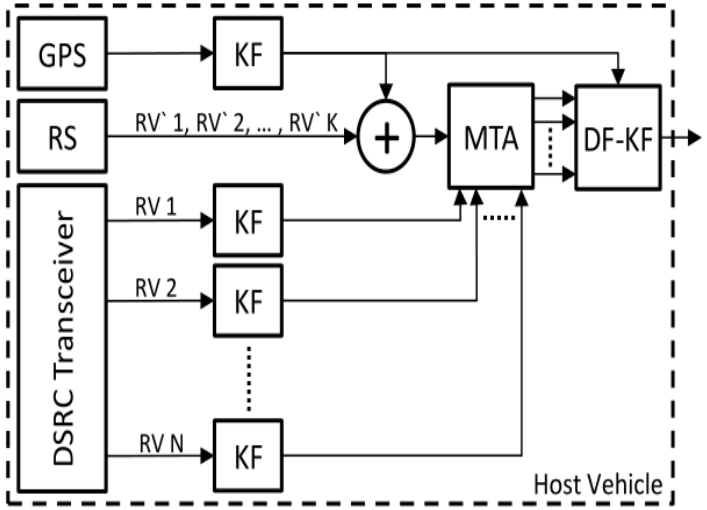

Measuring error in Vehicle Positioning

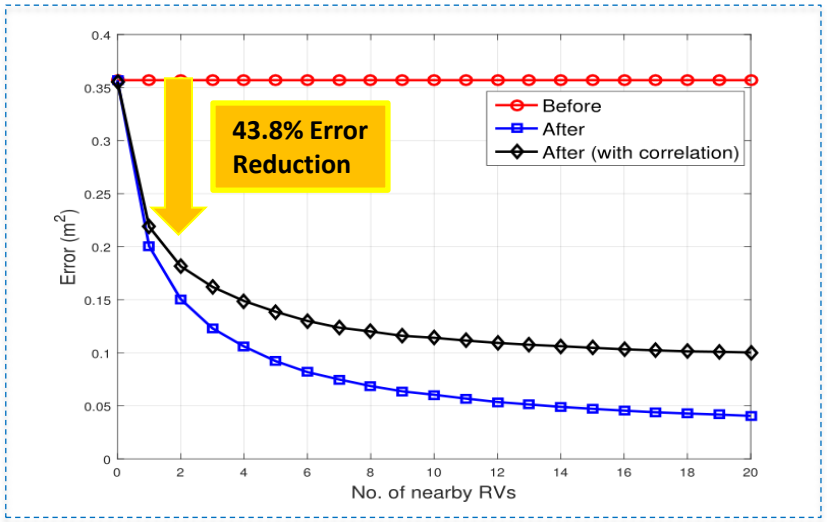

TOYOTA InfoTechnology Center, U.S.A., Inc.
PROTECTED

Main Idea behind Cooperative Perception:

Enhancing sensing range by sharing data (incl. camera, LIDAR, radar, etc.) with neighboring vehicles

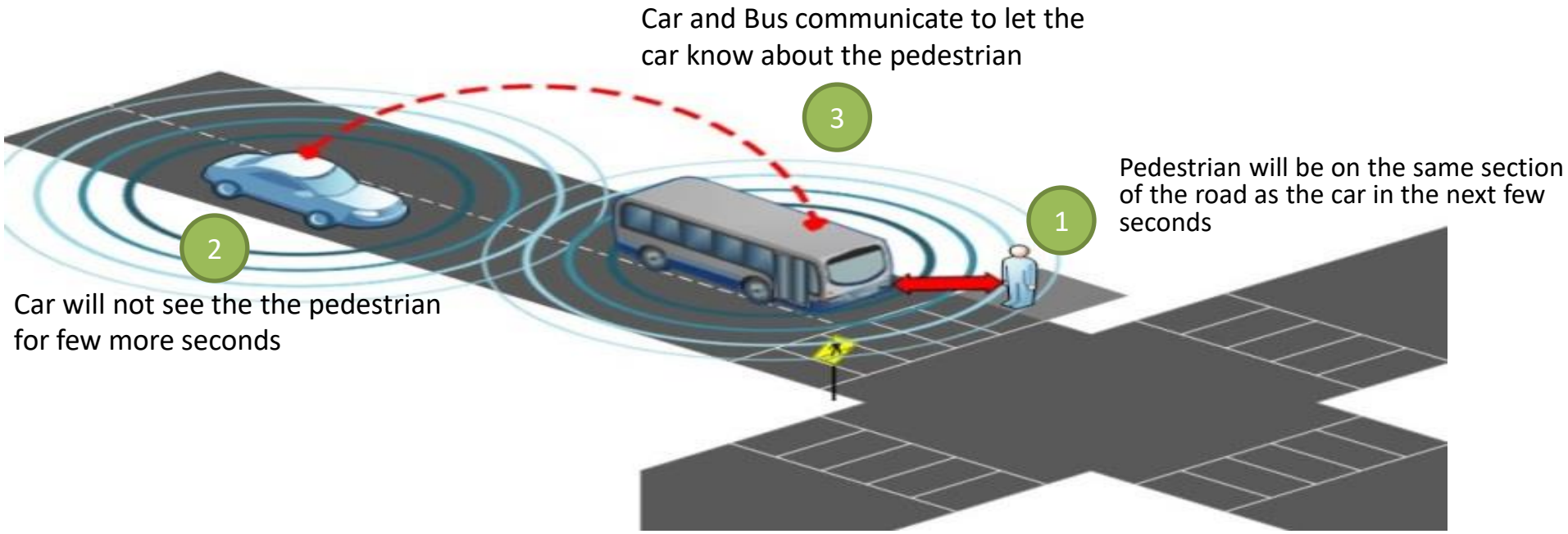

Cooperative Perception: Dynamic Object Detection

TOYOTA
INFOTECHNOLOGY
CENTER, U.S.A., INC.
PROTECTED

PROBLEM: Neural networks are unable to recognize all objects in certain conditions

Car / biker not detected by Neural Network

APPROACH: Combine multiple perspectives from neighboring cars of the same scenario

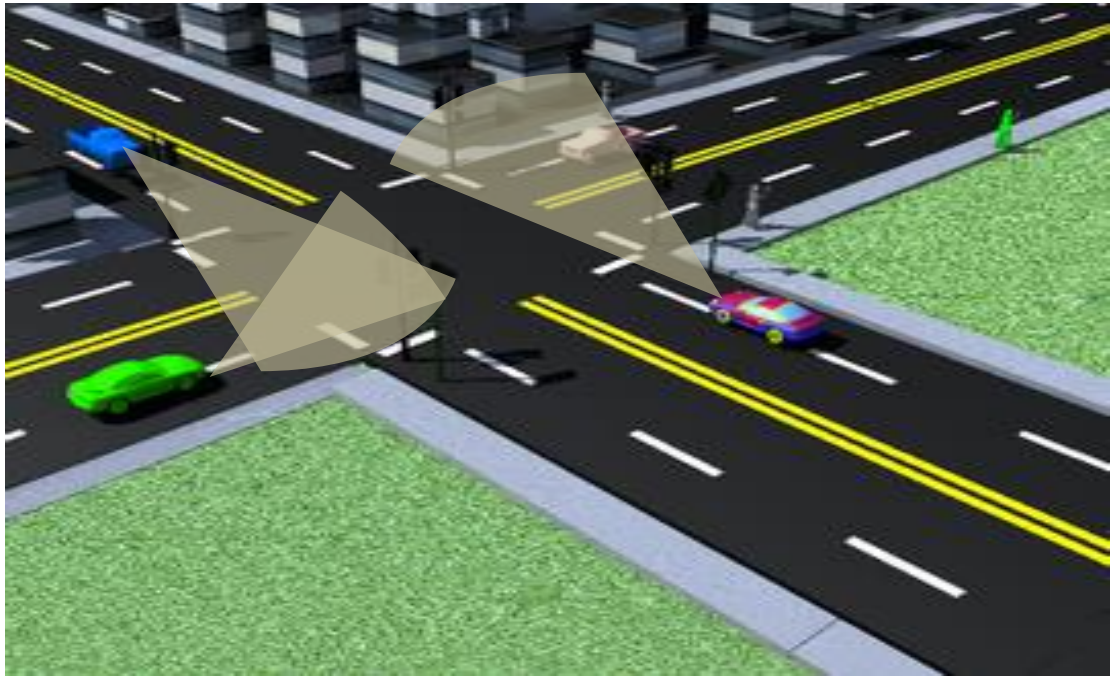

Designed novel 3D Vision Fusion Algorithm to allow bounding boxes to be updated with greater precision and occluded/distant objects to be shared between vehicles

Corolla Camera

neural network detects skateboarder

Prius Camera

neural network does not detect skateboarder

Corolla Detection

Prius Detection

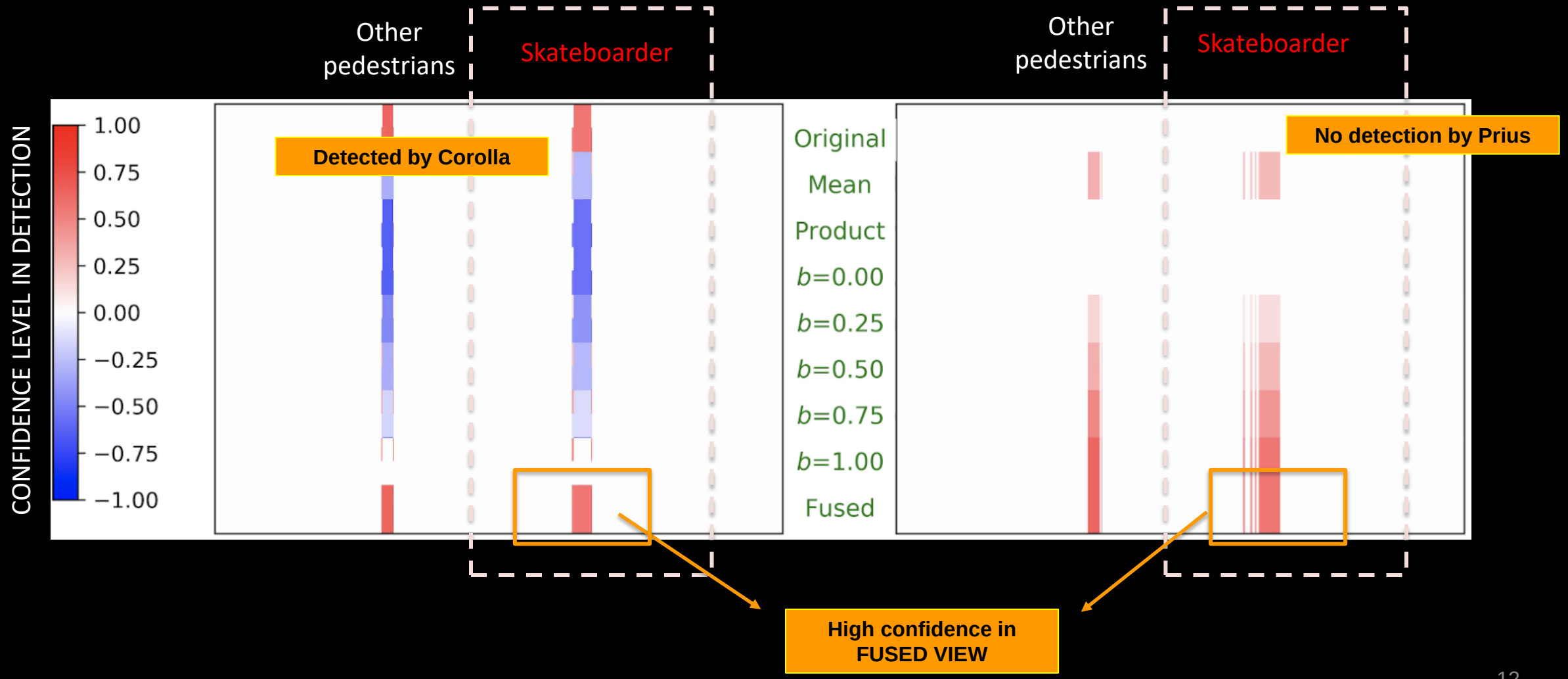

TOYOTA InfoTechnology Center, U.S.A., Inc.
PROTECTED

Main Idea behind Cooperative Path Planning:

Highway merging using V2X handshakes

Exchange V2V messages before merge to determine the merge order between on-ramp and highway vehicles

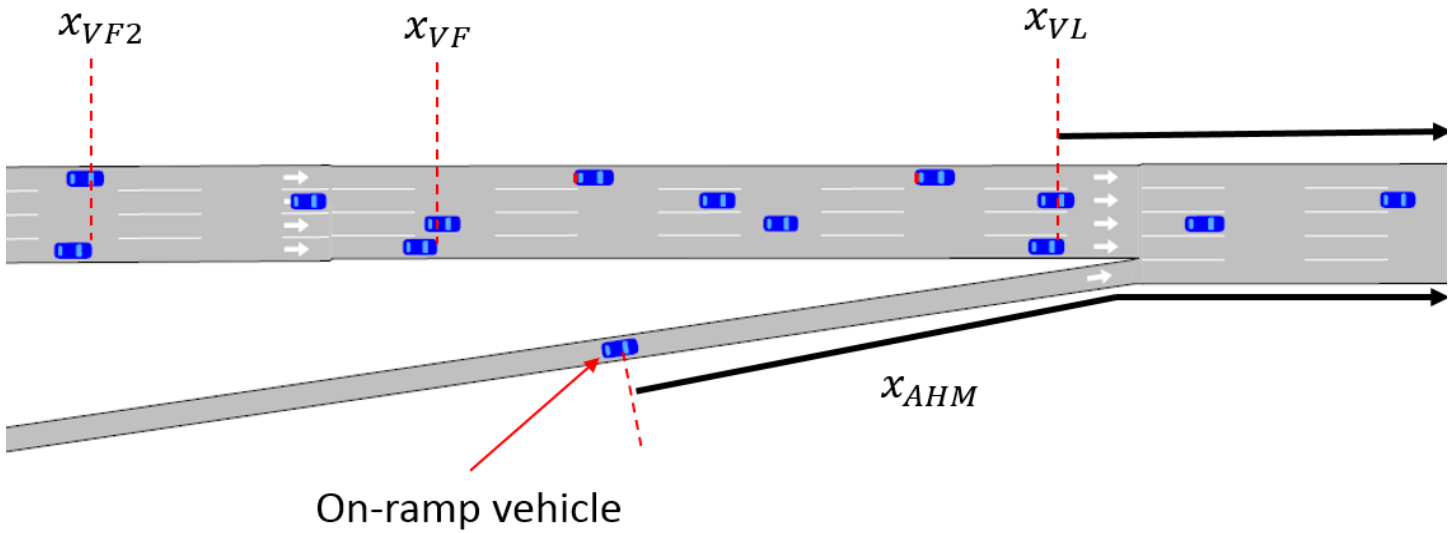

Reducing the wait time on-ramp before merge

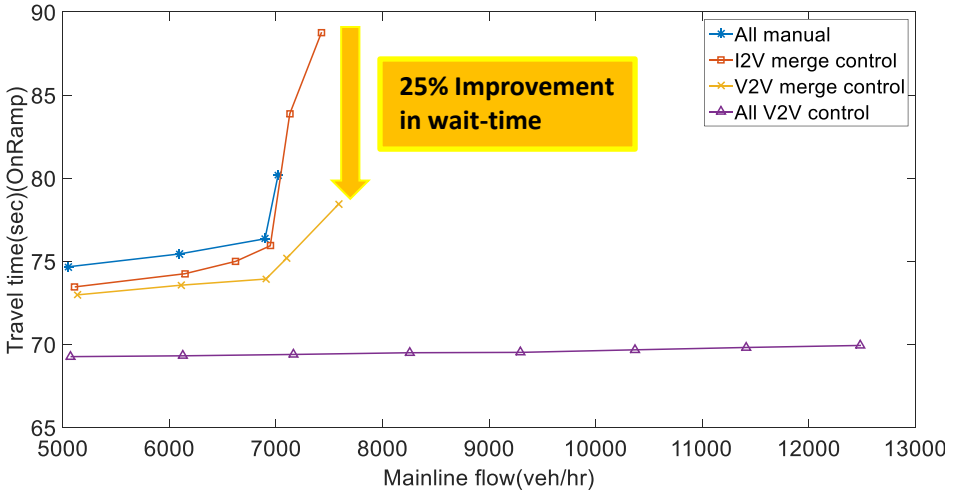

TOYOTA
INFOTECHNOLOGY
CENTER, U.S.A., INC.
PROTECTED

Main Idea behind Cooperative End-to-end Driving:

Achieve near 100% accuracy your vehicle's end-to-end driving by utilizing data from neighboring connected vehicles

What is End-to-end Driving?
Deep Learning to predict steering angles, required force on brake and gas pedals using sensor data

Camera data,
V2X data

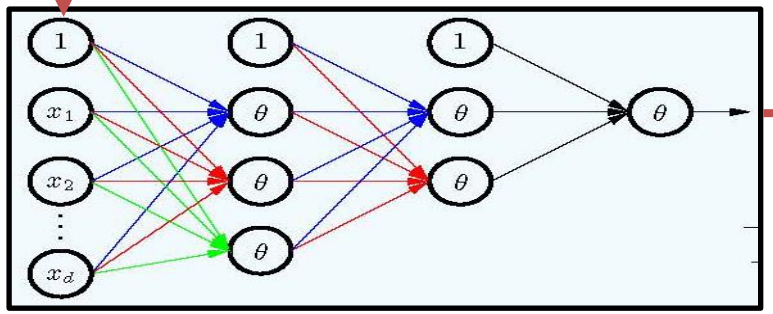

Steering angle

Convolutional Neural Network

Cooperative End-to-end Driving: Video-based Network

TOYOTA InfoTechnology Center, U.S.A., Inc.
PROTECTED

Baseline scenario: Ego vehicle predicts steering angle using forward facing camera data

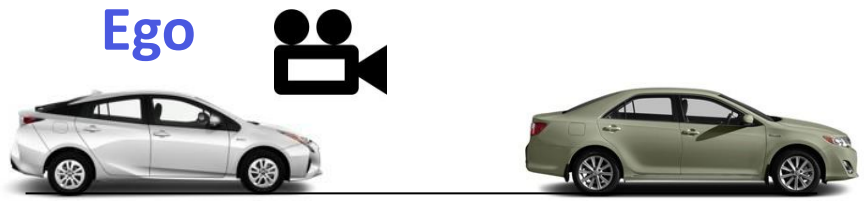

1

Input to neural network: Video frames

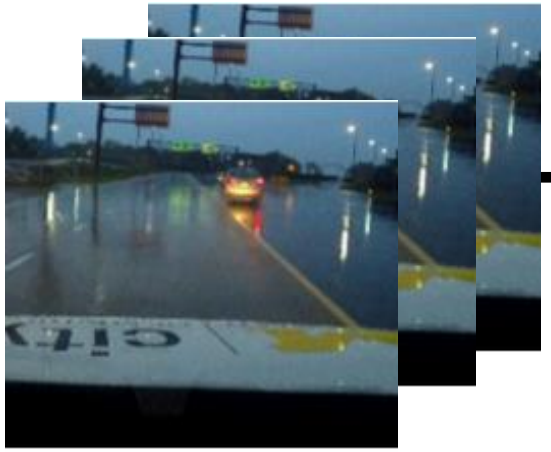

10 layer Video Neural Network

Steering Angle output of video neural network

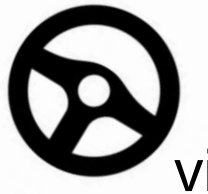

vid

Cooperative End-to-end Driving: V2V-based neural network - An alternative?

TOYOTA INFOTECHNOLOGY CENTER, U.S.A., INC.

PROTECTED

This is what the Ego vehicle measures independently:

Latitude: Lat_0
Longitude: Lon_0
Heading: ϕ_0

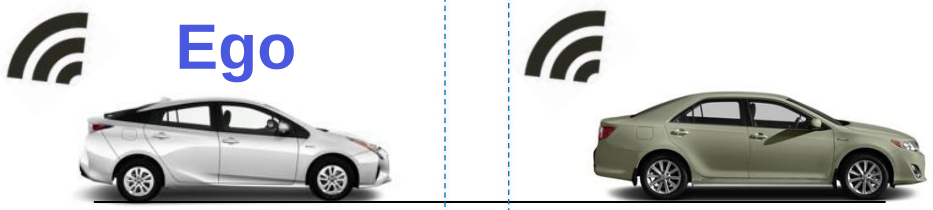

This is what the leading vehicle broadcasts:

Latitude: Lat_1
Longitude: Lon_1
Heading: ϕ_1

V2V Neural Network predicts the steering angle for Ego vehicle

2

$$x = \begin{bmatrix} \text{Latitude difference} \\ \text{Longitude difference} \\ \text{Sine of heading difference} \end{bmatrix} \rightarrow \boxed{\text{2 layer V2V Neural Network}} \rightarrow$$

$$\begin{bmatrix} Lat_1 - Lat_0 \\ Lon_1 - Lon_0 \\ \sin(\phi_1) - \sin(\phi_0) \end{bmatrix}$$

Steering Angle output of V2V neural network

Cooperative End-to-end Driving: Combining video-based and V2V-based networks

TOYOTA
INFOTECHNOLOGY
CENTER, U.S.A., INC.
PROTECTED

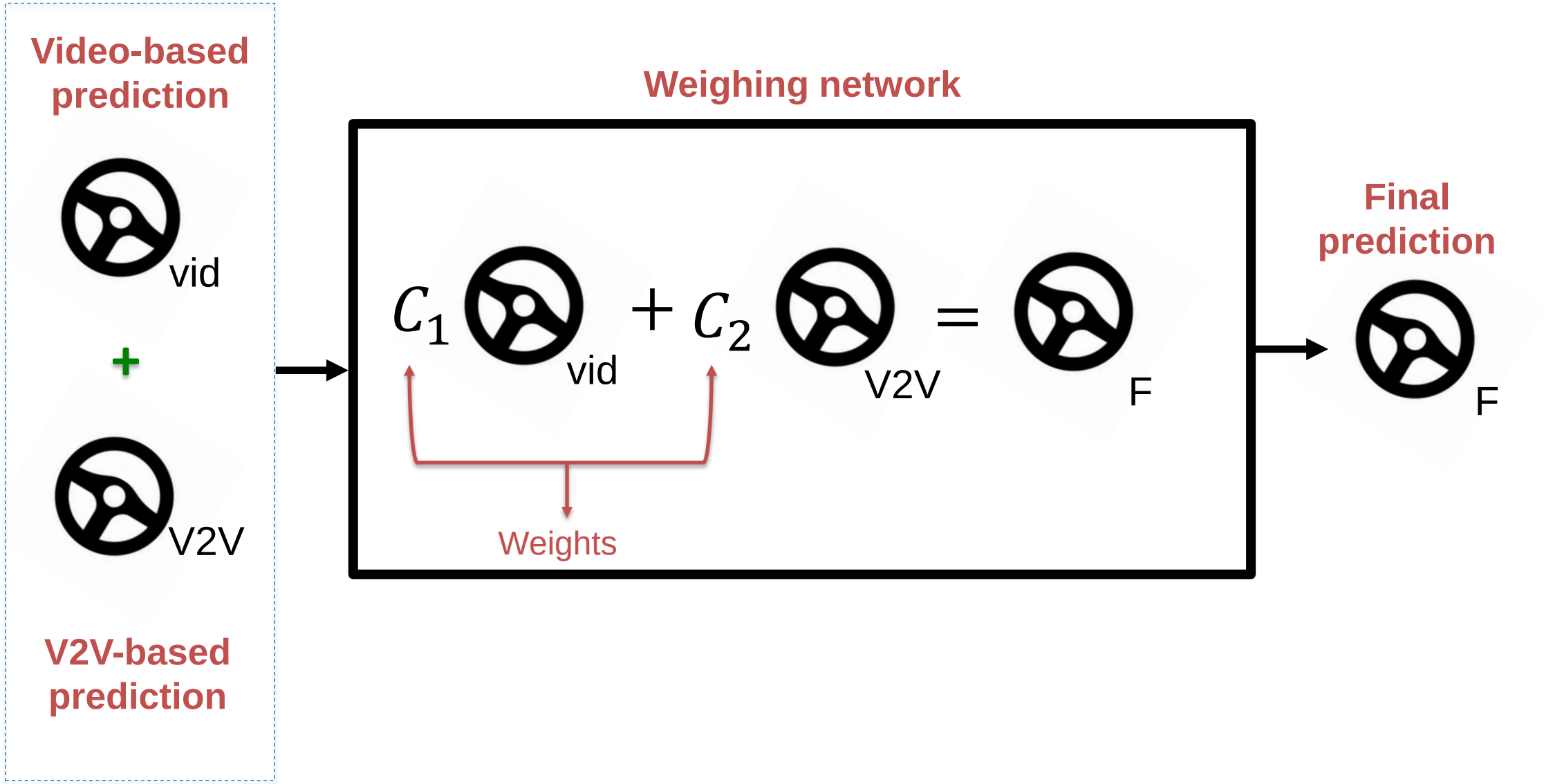

TOYOTA
INFOTECHNOLOGY
CENTER, U.S.A., INC.
PROTECTED

Good steering angle prediction

using a neural network trained on integrated video and V2V data

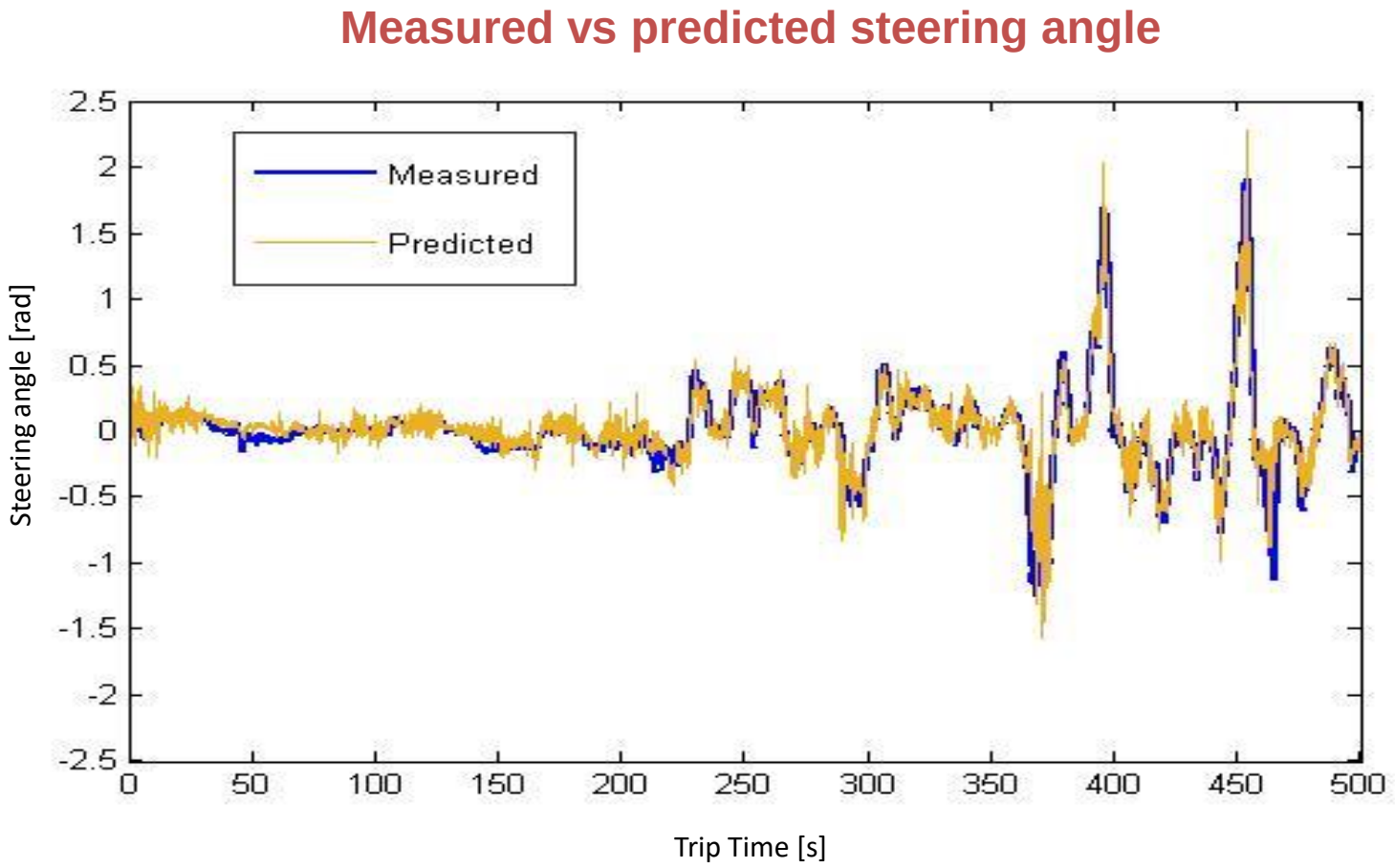

New Communication Requirements..

TOYOTA
INFOTECHNOLOGY
CENTER, U.S.A., INC.
PROTECTED

Total data rate per link: 50 Mbps.

Application	Data	Rate	Details
Cooperative Perception	Processed – detected objects	0.5 Mbps	60 byte/object, 100 objects, 10 Hz
Cooperative Perception	H.265/HEVC HD Camera - Raw	10 Mbps	640x360 resolution, compressed
Cooperative Perception	LIDAR - Raw	35 Mbps	6 verticle angels, 64 elements, 10 Hz horizontal rotation
Cooperative Path Planning	Coarse driving intention	0.05 Mbps	Few 100 bytes (e.g. 500 bytes) / msg, 10 Hz
Cooperative Path Planning	Planned Trajectory	2.5 Mbps	32 byte / coordination, 10 msec resolution, 10 sec trajectory, 10 Hz

For multiple links:

Requirement #1:

Total system data rate target 10 Gbps

(Link data rate @50 Mbps x Target to support 200 links)

Requirement #2:

Latency target1 = 20 msec

Ultra-low latency to support applications such as platooning

Latency target2 = 100 msec

For applications such as long range sensing, driving intention latency requirements would be relaxed (100 msec target)

mmWave Communications

TOYOTA INFOTECHNOLOGY CENTER, U.S.A., INC.

PROTECTED

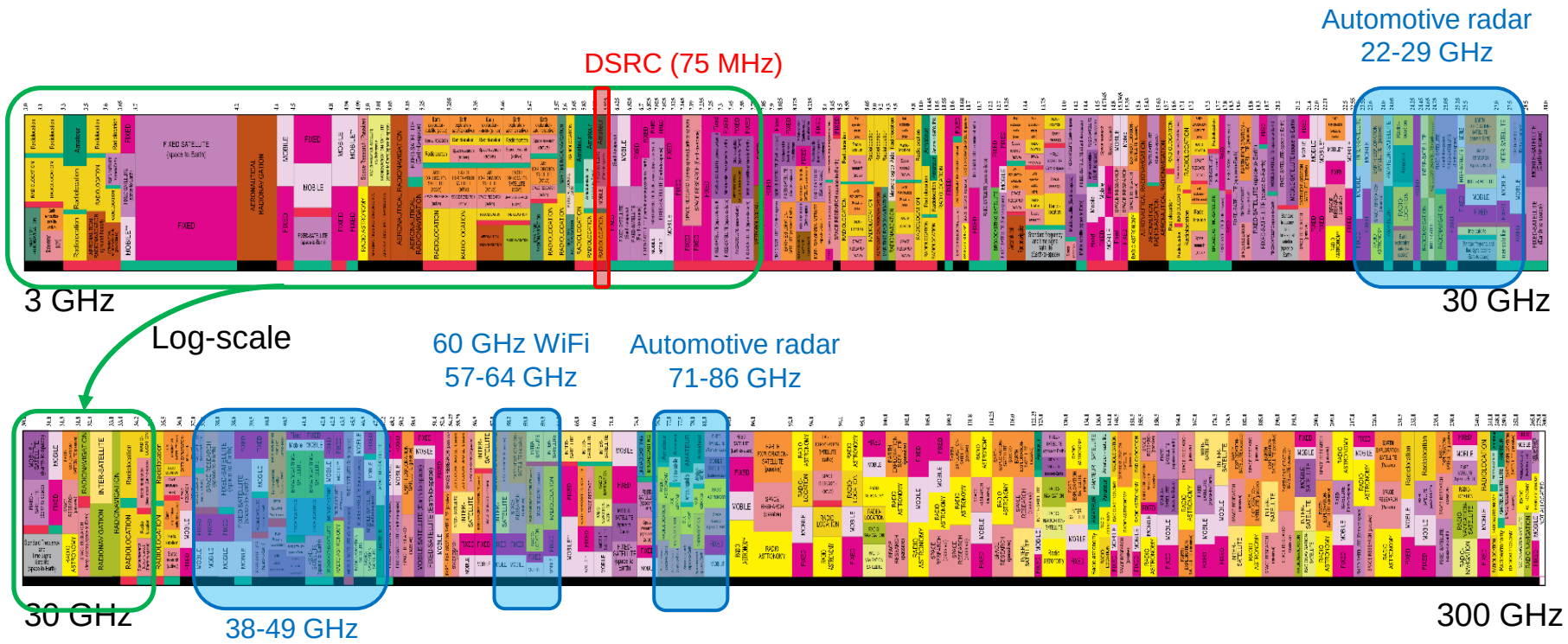

Huge spectrum available at mmWave bands

Advancement in CMOS technology enables low cost mmWave devices**

60 GHz WiFi (WirelessHD, IEEE 802.11ad) is already on the market

* United States radio spectrum frequency allocation chart as of 2011

** T. S. Rappaport, J. N. Murdock, and F. Gutierrez, "State of the art in 60-GHz integrated circuits and systems for wireless communications," Proceedings of the IEEE, vol. 99, no. 8, pp. 1390–1436, Aug 2011

Potential applications of mmWave Communications

TOYOTA InfoTechnology Center, U.S.A., Inc.
PROTECTED

Use Case	Category	Throughput	Latency	Network type
Cooperative Perception	Traffic safety, efficiency	High	Low	V2V
Cooperative maneuvering	Traffic safety, efficiency	Moderate	Ultra-low	V2V
Map download	Traffic safety, efficiency	High	High	V2I
Live Perceptual data broadcast	Traffic safety, efficiency	High	Low	V2I
Sensor data gathering	Traffic safety, efficiency	Moderate	Moderate	V2I
Sending data for cloud processing	Can be any	Varied	Varied	V2I
Media download	Infotainment	Varied	High	V2I
Video steaming	Infotainment	High	Low	V2I

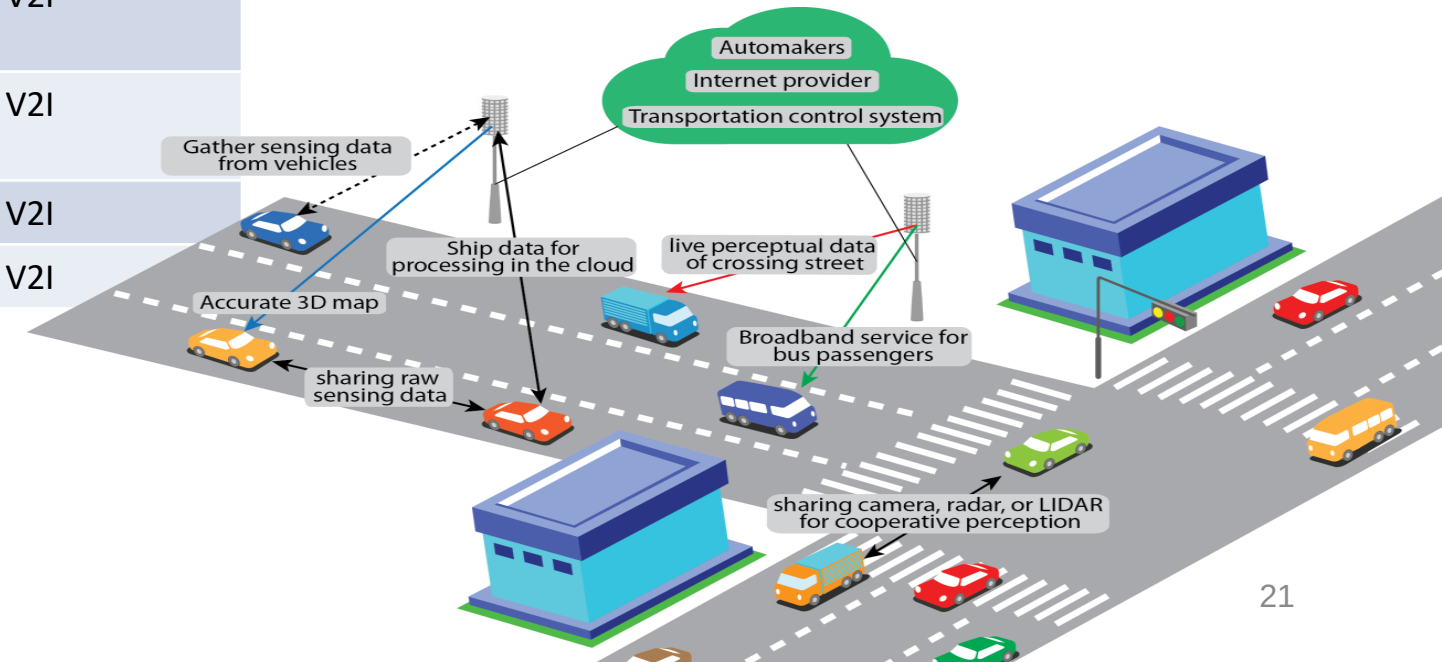

Key Takeaways

Cooperative Automated Driving can address gaps in current solutions:

Mapping: To estimate the geometry of roads in real-time by using sensor data from the vehicles ahead

Localization: To improve positioning by leveraging neighboring GPS receivers

Perception: To get multiple perspectives of same driving scene & significantly enhance dynamic object detection

Path Planning: To reduce on-ramp time using V2X-assisted highway merging

End-to-end Driving: To significantly improve performance by integrating video and V2V networks

Questions?

TOYOTA
InfoTechnology
Center, U.S.A., Inc.
PROTECTED

Thank You

gbansal@us.toyota-itc.com